PL-1 PLASTIC LAMINATE CASEWORK, SS-1 SOLID SURFACE COUNTERTOP WITH 4 IN. BACKSPLASH

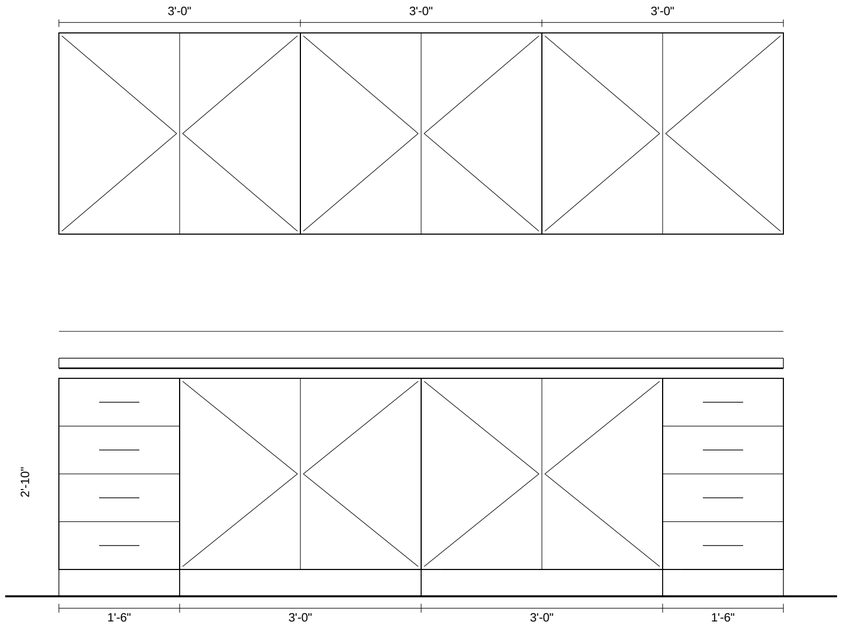

1 NURSE STATION 104 ELEVATION
SCALE: 3/4" = 1'-0"

PL-1 PLASTIC LAMINATE CASEWORK, SS-1 SOLID SURFACE COUNTERTOP WITH 4 IN. BACKSPLASH

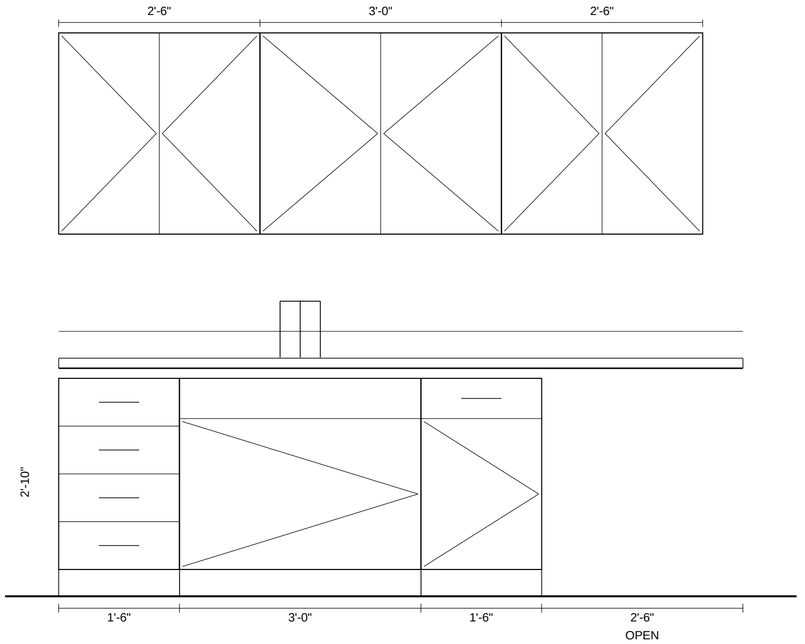

2 BREAK ROOM 110 ELEVATION
SCALE: 3/4" = 1'-0"

PL-1 PLASTIC LAMINATE CASEWORK, SS-1 SOLID SURFACE COUNTERTOP WITH 4 IN. BACKSPLASH

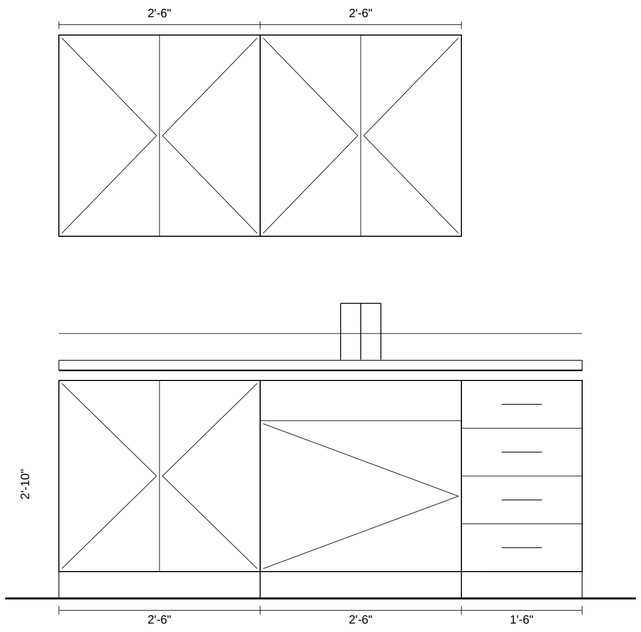

3 EXAM ROOM 112 ELEVATION
SCALE: 3/4" = 1'-0"

CASEWORK NOTES

1. ALL CASEWORK AWI CUSTOM GRADE, FLUSH OVERLAY, FRAMELESS CONSTRUCTION.
2. PL-1: HIGH PRESSURE PLASTIC LAMINATE ON ALL EXPOSED SURFACES.
3. SS-1: 1/2 IN. SOLID SURFACE COUNTERTOPS, EASED EDGE, 4 IN. BACKSPLASH.
4. 4 IN. WIRE PULLS, 110 DEGREE CONCEALED HINGES, FULL EXTENSION DRAWER SLIDES.
5. PROVIDE BLOCKING IN WALLS FOR ALL WALL CABINETS.
6. SUBMIT SHOP DRAWINGS FOR APPROVAL BEFORE FABRICATION.

SAMPLE ARCHITECTS

SAMPLE TOWN

SAMPLE CLINIC
TENANT IMPROVEMENT
PROJECT NO. 2614

BID SET
DATE 11/01/2026

NOT A REAL PROJECT. DRAWN AS A SAMPLE FOR THE BIDRIDGE LIVE DEMO.

INTERIOR ELEVATIONS - CASEWORK

A-601